# APD22P-RP

Perkins

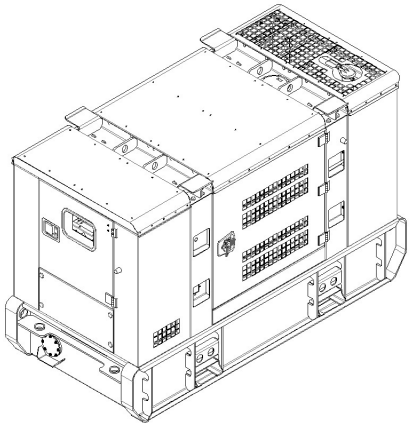

POWER YOUR FUTURE

**22kVA / 17.6 kW**
**POWERED by PERKINS**

## DIESEL GENERATING SET 400/230 V - 50 Hz

| MODEL | | | APD22P-RP |
|---|---|---|---|
| Power Pf. 0.8 | Standby | kVA | 22 |
| | | kW | 17.6 |
| | Prime | kVA | 20 |
| | | kW | 16 |

**Standby:** According to ISO8528. Emergency StandbyPower (ESP) is defined as the maximum power available during a variable electrical power sequence.
**Prime:** According to ISO8528. Prime power (PRP) is defined as being the maximum power which a generating set is capable of delivering continuously while supplying a variable electrical load when operated for an unlimited number of hours per year .

- ✓ High quality, reliable and complete power unit
- ✓ Compact design
- ✓ Easy start and maintenance possibility
- ✓ Every generating set is subject to a comprehensive test program which includes full load testing, checking and provision of all control and safety shut down functions testing
- ✓ Fully engineered with a wide range of options and accessories: Canopy, sound proof canopy

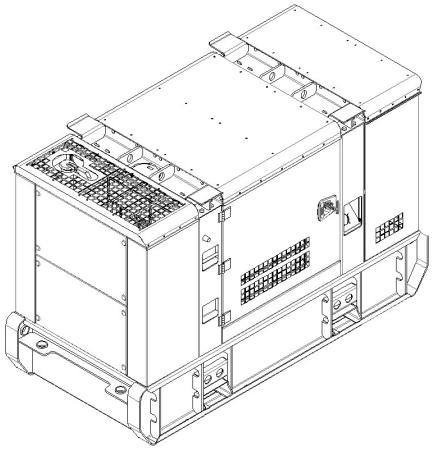

ISO 9001 ISO 14001 ISO 45001 CE

Manufacturer reserves the right to make changes in model, technical specifications, color, equipment and accessories without prior notice.

## ENGINE

| PERKINS | | |
|---|---|---|
| Model | | 404A-22G1 |
| Engine Power Output at rated rpm | kWm | 20.6 |
| | HP | 28 |
| Aspiration and Cooling | | Natural |
| Total Displacement | Litre | 2.216 |
| No. of Cylinders and Build | | 4 - Inline |
| Engine Speed | rpm | 1500 |
| Bore and Stroke | mmxmm | 84x100 |
| Compression Ratio | | 23.3:1 |
| Governor | | Mechanical |
| Fuel Consumption at full load | L/hr | 5.4 |
| Fuel Tank Capacity | Litre | Canopy:150 |
| Oil Capacity | Litre | 10.6 |
| Coolant Capacity | Litre | 7 |
| Radiator Cooling Air | $m^3$/min | 40.2 |
| Air Intake – Engine | $m^3$/min | 1.45 |
| Exhaust Gas Flow | $m^3$/min | 3.94 |
| Sound Level(1M) | dBA | 69 |
| Sound Level(7M) | dBA | 58 |

- ✓ Heavy duty Perkins diesel engine
- ✓ Four stroke, water cooled, natural
- ✓ Direct injection fuel system
- ✓ Mechanical Governor system
- ✓ 12/24 V D.C. starter and charge alternator
- ✓ Replaceable fuel filter, oil filter and dry element air filter
- ✓ Cooling radiator and fan
- ✓ Starter battery (with lead acid) including Rack and Cables
- ✓ Flexible fuel connection hoses and manual oil sump drain valve
- ✓ Industrial capacity exhaust silencer and steel bellows
- ✓ Jacket water heater(at automatic models)
- ✓ Operation manuals and circuit diagram documents

## ALTERNATOR

| | |
|---|---|
| Design | Brushless single bearing, revolving field |
| Stator | 2/3 pitch |
| Rotor | Single bearing, flexible disc |
| Insulation System | Class H |
| Standard Temperature Rise | 125 - 163°C Continuous |
| Exciter Type | Self Excited |
| Phase Rotation | A (U), B (V), C (W) |
| Alternator Cooling | Direct drive centrifugal blower fan |
| AC Waveform Total Harmonic Distortion | No load < 1.5%. Non distorting balanced linear load < 5% |
| Telephone Influence Factor (TIF) | <50 per NEMA MG1-22.43 |
| Telephone Harmonic Factor (THF) | <2% |

- ✓ Brushless, single bearing system, flexible disc, 4 poles
- ✓ Insulation class H
- ✓ Standard degree of protection IP23
- ✓ Self-exciting and self-regulating
- ✓ Impregnation with tropicalised epoxy varnish
- ✓ Solid state Automatic Voltage Regulator
- ✓ Stator winding with 2/3 pitch for improved harmonics

## CONTROL SYSTEM

Control supervision and protection panel is mounted on the genset base frame. The control panel is equipped as follows:

DSE 6120

### 1. Auto Mains Failure Control Panel

Panel equipments:

- ✓ Control with AMF module
- ✓ Static battery charger
- ✓ Emergency stop push button

### a) Generating set control module DSE6120 features:

- ✓ The module is used to monitor main supply and starts and stops of a standby generating set
- ✓ Micro-processor based design
- ✓ Automatic control of main and generator contactors
- ✓ Monitors engine performance and AC power output LED alarm indication
- ✓ Front panel configuration of timers and alarm trip points
- ✓ 4 configurable analogue/digital inputs, 8 configurable digital inputs
- ✓ 6 configurable DC outputs
- ✓ Easy push button control

  STOP/RESET - MANUAL - AUTO - TEST – START

### b) Metering via LCD display:

- ✓ Generator Volts (L-L / L-N)
- ✓ Engine oil pressure (PSI-Bar)
- ✓ Generator Ampere (L1,L2,L3)
- ✓ Engine temperature (° C&° F)
- ✓ Generator Frequency (Hz)
- ✓ Plant battery volts
- ✓ Engine hours run
- ✓ Mains Volts (Ph-Ph/Ph-N)
- Generator kVA
- Generator kW
- Generator Cos (σ)

### c) Alarms:

- ✓ Over and Under Speed
- ✓ Low and High Battery Volt.
- ✓ Start and Stop Failure
- ✓ Charge fail
- ✓ Over Current
- ✓ Under / Over Generator Voltage
- ✓ Low Oil Pressure
- ✓ Emergency stop
- ✓ High engine temperature

### d) LED indications

- ✓ Mains available
- ✓ Generator available
- ✓ Mains on load
- ✓ Generator on load

### 2. Power Outlet Terminal Board Mounted on the Gen-set Base Frame

## OPTIONAL EQUIPMENTS

### Diesel Engine

- ✓Oil heater

### Alternator

- ✓ 3/4 Pole Output Circuit Breaker
- ✓ Anti-condensation Heater

### Panel

- ✓ Charge ammeter
- ✓ Transfer Switch 3Pole
- ✓ Transfer Switch 4 Pole
- ✓ Earth Fault ,single set

### Accessories

- ✓ Bulk fuel tank
- ✓ Automatic filling system
- ✓ Fuel-water separator filter
- ✓ Low fuel level alarm
- ✓ Residential silencer
- ✓ Enclosure or sound proof canopy
- ✓ Trailer
- ✓ Manual oil drain pump
- ✓ Tool kit for maintenance

## CHASSIS

- ✓ The complete gen-set is mounted as whole on a heavy-duty fabricated, steel base frame
- ✓ Anti-vibration pads are fixed between the engine/ alternator feet and the base frame
- ✓ Base frame design incorporates an integral fuel tank (Up to 1000 kVA)
- ✓ The generating set can be lifted or carefully pushed / pulled by the base frame
- ✓ Dial type fuel gauge and drain plug on the fuel tank
- ✓ Forklift pockets within base frame (up to 500kVA)

## DIMENSIONS

| OPEN TYPE | | |
|---|---|---|
| DIMENSIONS (LxWxH) | mm | N/A |
| DRY WEIGHT | kg | N/A |
| **SOUND ATTENUATED TYPE** | | |
| DIMENSIONS (LxWxH) | mm | 2200x1063x1423 |
| DRY WEIGHT | kg | 1150 |

## CANOPY

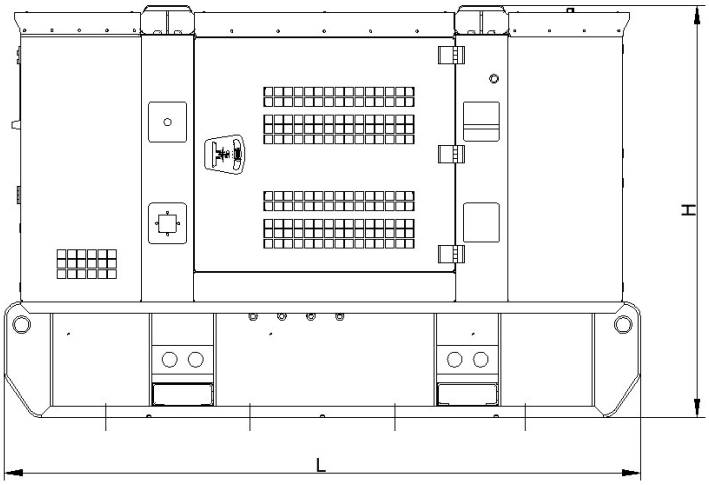


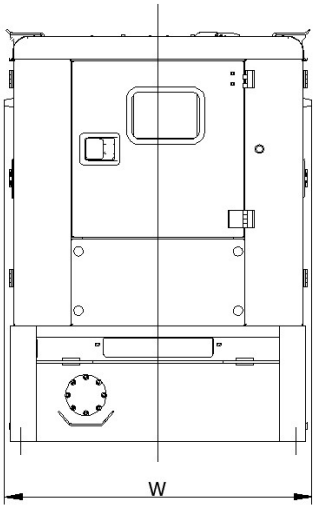


- ✓ All canopy parts are designed with modular principles
- ✓ Without welding assembly
- ✓ Doors on each side
- ✓ All metal canopy parts are painted by electrostatic polyester powder paint
- ✓ Exhaust silencer is protected against environment influences
- ✓ Thermally insulated engine exhaust system
- ✓ Emergency stop push button is installed outside of the canopy
- ✓ Easy lifting and moving
- ✓ Easy maintenance and operation