APD275BD

POWER
YOUR
FUTURE

275 kVA / 220kW
POWERED by BAUDOUIN

DIESEL GENERATING SET 400/230 V - 50 Hz - 3 Phase

MODEL			APD275BD
Power Pf. 0.8	Standby	kVA	275
		kW	220
	Prime	kVA	250
		kW	200

Standby: Continuous running at variable load for duration of an emergency. No overload is permitted on these ratings. In accordance with ISO 3046.
Prime: Continuous running at variable load for unlimited periods with 10% overload available for 1 hour in any 12 hours period. In accordance with ISO 8528, ISO 3046.

- ✓ High quality, reliable and complete power unit
- ✓ Compact design
- ✓ Easy start and maintenance possibility
- ✓ Every generating set is subject to a comprehensive test program which includes full load testing, checking and provision of all control and safety shut down functions testing
- ✓ Fully engineered with a wide range of options and accessories: Canopy, sound proof canopy and off-road trailer

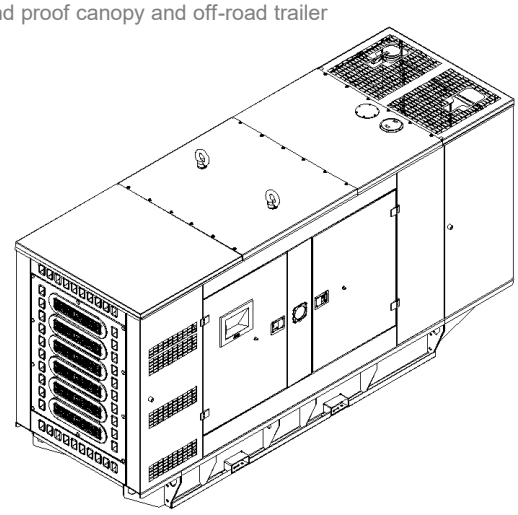

ISO 9001 ISO 14001 ISO 45001 CE

Manufacturer reserves the right to make changes in model, technical specifications, color, equipment and accessories without prior notice.

Publication No. 2024/11/26

POWER YOUR FUTURE

ENGINE

BAUDOUIN		
Model		6M16G6D0/S
Engine Power Output at rated rpm	kWm	264
	HP	353.8
Aspiration and Cooling		Turbocharged and Aftercooled
Total Displacement	Litre	9.726
No. of Cylinders and Build		6 - Inline
Engine Speed	rpm	1500
Bore and Stroke	mm×mm	126 × 130
Compression Ratio		17:1
Governor		Electronic
Fuel Consumption at full load	L/hr	56.9
Fuel Tank Capacity	Litre	470
Oil Capacity	Litre	30
Coolant Capacity	Litre	42
Radiator Cooling Air	m³/min	415
Air Intake – Engine	m³/min	18
Exhaust Gas Flow	m³/min	50.6

- ✓ Heavy duty diesel engine
- ✓ Four stroke, water cooled, Turbocharged and Aftercooled
- ✓ Direct injection fuel system
- ✓ Electronic Governor system
- ✓ 24Vdc starter and charge alternator
- ✓ Replaceable fuel filter, oil filter and dry element air filter
- ✓ Cooling radiator and fan
- ✓ Starter battery (with lead acid) including Rack and Cables
- ✓ Flexible fuel connection hoses and manual oil sump drain valve
- ✓ Industrial capacity exhaust silencer and steel bellows
- ✓ Jacket water heater(at automatic models)
- ✓ Operation manuals and circuit diagram documents

ALTERNATOR

Design	Brushless single bearing, revolving field
Stator	2/3 pitch
Rotor	Single bearing, flexible disc
Insulation System	Class H
Standard Temperature Rise	125 - 163° C Continuous
Exciter Type	Self Excited
Phase Rotation	A (U), B (V), C (W)
Alternator Cooling	Direct drive centrifugal blower fan
AC Waveform Total Harmonic Distortion	No load < 1.5%. Non distorting balanced linear load < 5%
Telephone Influence Factor (TIF)	<50 per NEMA MG1-22.43
Telephone Harmonic Factor (THF)	<2%

- ✓ Brushless, single bearing system, flexible disc, 4 poles
- ✓ Insulation class H
- ✓ Standard degree of protection IP22 (*IP23 is available.)
- ✓ Self-exciting and self-regulating
- ✓ Impregnation with tropicalized epoxy varnish
- ✓ Solid state Automatic Voltage Regulator
- ✓ Stator winding with 2/3 pitch for improved harmonics

CONTROL SYSTEM

DSE 7320

Control supervision and protection panel is mounted on the genset base frame. The control panel is equipped as follows:

1. Auto Mains Failure Control Panel

Panel equipments:
- ✓ Control with AMF module
- ✓ Static battery charger
- ✓ Emergency stop push button

a) Generating set control module DSE 7320 features:

✓The module is used to monitor a mains supply and starts and stops a standby generating set
- ✓ Micro-processor based design
- ✓Automatic control of mains and generator contactors
- ✓Monitors engine performance and AC power output
- ✓LED alarm indication
- ✓Front panel configuration of timers and alarm trip points
- ✓Easy push button control
  STOP/RESET - MANUAL –TEST- AUTO – MUTE ALARM – START

b) Metering via LED display:

- ✓ Generator Volts (L-L / L-N)
- ✓ Engine oil pressure (PSI-Bar)
- ✓ Generator Ampere (L1,L2,L3)
- ✓ Engine temperature (° C&° F)
- ✓ Generator Frequency (Hz)
- ✓ Plant battery volts
- ✓ Engine hours run
- ✓ Mains Volts (Ph-Ph/Ph-N)
- ✓ Generator kVA, kWh
- ✓ Generator kW as % of rated kW setting
- ✓ Generator Cos (σ)

c) Alarms:

- ✓ Over and Under Speed
- ✓ Low and High Battery Volt.
- ✓ Start and Stop Failure
- ✓ Charge fail
- ✓ Over Current
- ✓ Under / Over Generator Voltage
- ✓ Low Oil Pressure
- ✓ Emergency stop
- ✓ High engine temperature
- ✓ kW overload
- ✓ Unbalanced load
- ✓ Independent earth fault trip

d) LED indications

Four configurable LED's like:
- ✓ Mains available
- ✓ Generator available
- ✓ Mains on load
- ✓ Generator on load

2. Power Outlet Terminal Board Mounted on the Genset Base Frame

OPTIONAL EQUIPMENTS

Diesel Engine

✓Oil heater

Alternator

- ✓ 3/4 Pole Output Circuit Breaker
- ✓ Anti-condensation Heater

Panel

- ✓ Charge ammeter
- ✓ Transfer Switch 3Pole
- ✓ Transfer Switch 4 Pole
- ✓ Earth Fault ,single set

Accessories

- ✓ Bulk fuel tank
- ✓ Automatic filling system
- ✓ Fuel-water separator filter
- ✓ Low fuel level alarm
- ✓ Residential silencer
- ✓ Enclosure or sound proof canopy
- ✓ Trailer
- ✓ Manual oil drain pump
- ✓ Tool kit for maintenance

CHASSIS

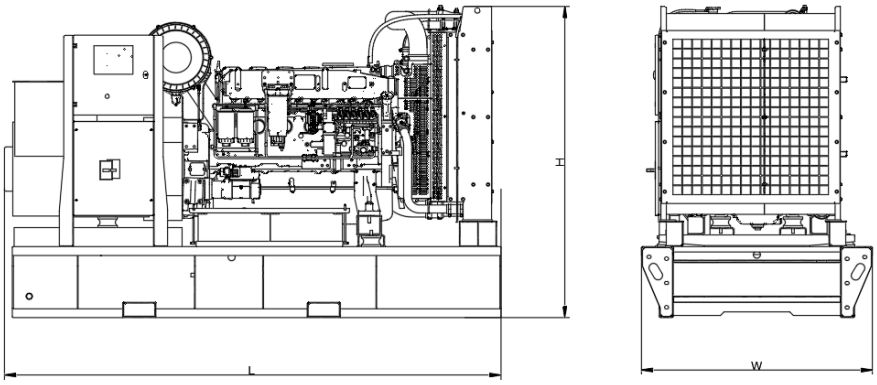

- ✓ The complete gen-set is mounted as whole on a heavy-duty fabricated, steel base frame
- ✓ Anti-vibration pads are fixed between the engine/alternator feet and the base frame
- ✓ Base frame design incorporates an integral fuel tank (Up to 1000 kVA)
- ✓ The generating set can be lifted or carefully pushed / pulled by the base frame
- ✓ Dial type fuel gauge and drain plug on the fuel tank
- ✓ Forklift pockets within base frame (up to 500kVA)

DIMENSIONS

OPEN TYPE		
DIMENSIONS (L×W×H)	mm	2794x1300x1753
DRY WEIGHT	kg	2200
SOUND ATTENUATED TYPE		
DIMENSIONS (L×W×H)	mm	3933x1356x2176
DRY WEIGHT	kg	3000

CANOPY

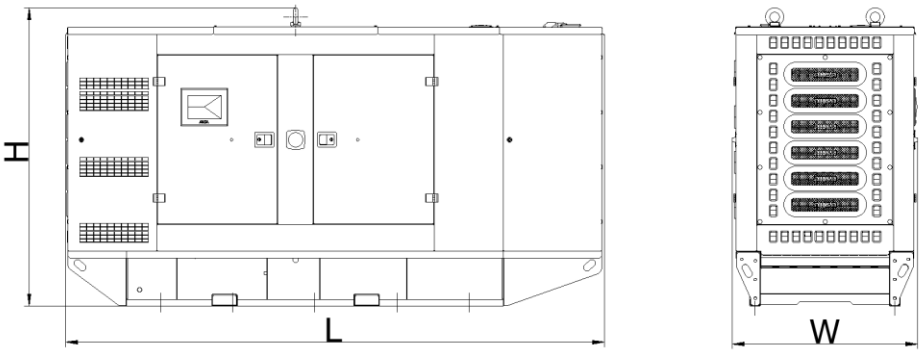

- ✓ All canopy parts are designed with modular principles
- ✓ Without welding assembly
- ✓ Doors on each side
- ✓ All metal canopy parts are painted by electrostatic polyester powder paint
- ✓ Exhaust silencer is protected against environment influences
- ✓ Thermally insulated engine exhaust system
- ✓ Emergency stop push button is installed outside of the canopy
- ✓ Easy lifting and moving
- ✓ Easy maintenance and operation