Mobile crushing plant
Lokotrack LT120

metso
Expect results



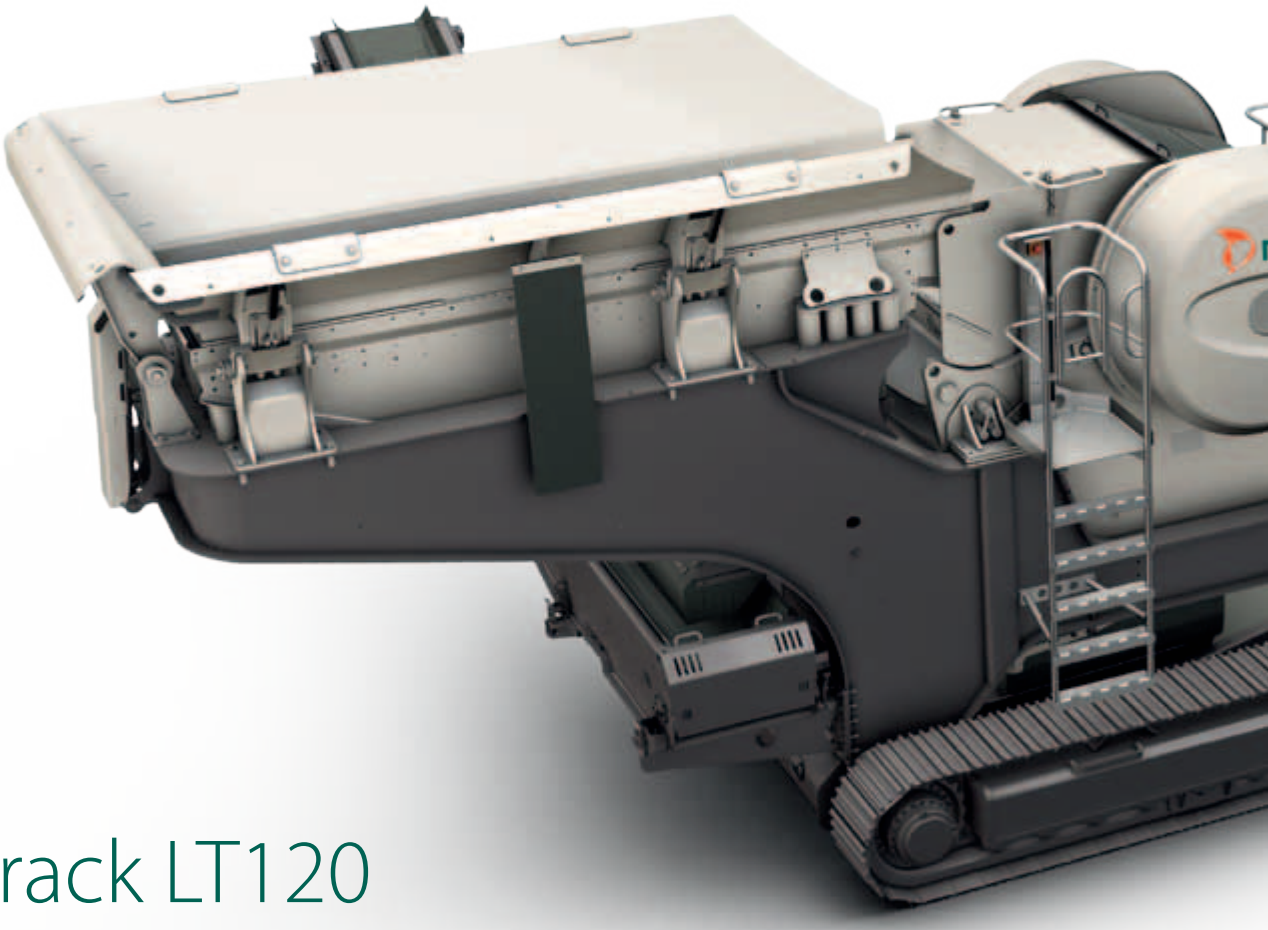

Lokotrack LT120 Next Level of Crushing

Lokotrack LT120 is the latest and most advanced of Metso's track-mounted jaw crusher plants. This robust new solution for mobile crushing is an outcome of combining solid experience with a new way of thinking. The thorough design process giving attention to every detail guarantees outstanding performance, and high-quality Metso parts ensure a reliable solution.

Reliable productivity

A reliable and efficient mobile crushing plant is a sum of several factors working together smoothly. The new Metso C120 jaw crusher with its 1200 x 870 mm (47 x 34") feed opening provides excellent capacity even in the toughest applications. The hydraulic drive ensures trouble-free operation and enables crusher direction to be changed in case of blockage. The totally new Caterpillar C13 engine module provides optimal power to the high inertia flywheels.

Easy to transport

Thanks to its compact dimensions combined with agile tracks, the Lokotrack LT120 is a very easily transportable unit. Chassis design with good clearance at both ends enables simple loading on a trailer. The feed hopper sides equipped with a patented securing system allow the unit to be ready for crushing only moments after arriving onsite. The side conveyor with its excellent stock pile capacity is easy to install on either side of the unit.

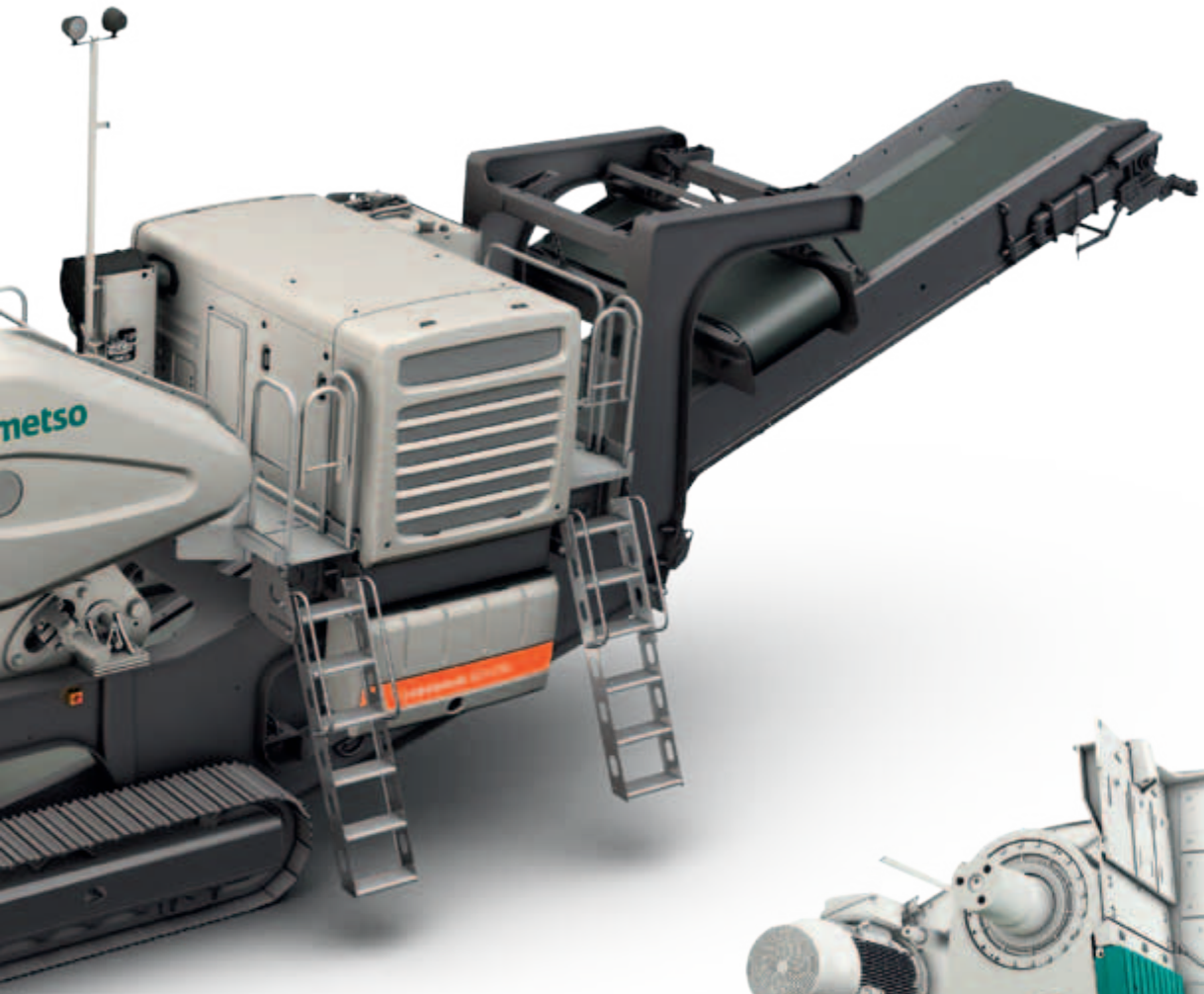

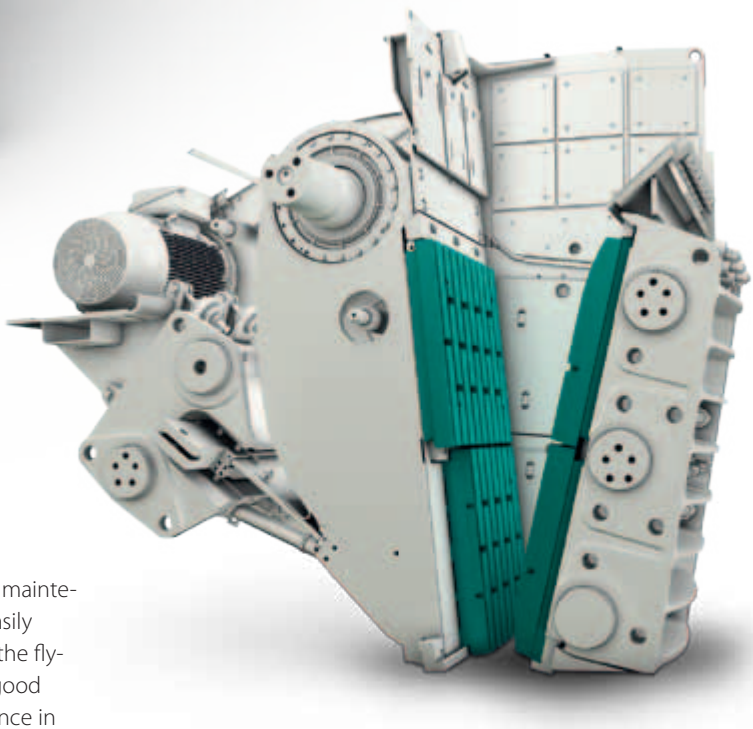

Capacity is maximised with an excellent nip angle and aggressive linear stroke.

Safe to operate and maintain

In designing the Lokotrack LT120, quick and easy maintenance was a major driver. The jaw die bolts are easily accessible, and the composite covers protecting the flywheels can be safely and easily opened. Having good access and proper platforms really make a difference in daily operational safety.

Efficiency with electricity

Lokotrack LT120E is an alternative to the hydraulic driven version. With the electrically driven version energy can be taken either from an external power supply or from a 420 kVA onboard diesel generator. The electrically driven crusher and conveyors enable a highly effective, economical and environment-friendly process. The Lokotrack LT120E electrical system is designed in such a way that it provides the same benefits in operation and maintenance as the hydraulic version.

Lokotrack LT120:

- The robust Metso C120 crusher provides high capacity in all applications
- Compact dimensions enable excellent transportability
- Safe and reliable process with easy control system
- Smart design makes maintenance quick and safe









1. *Composite flywheel covers allow quick and easy changing of the drive belts.*
2. *The feed hopper sides and locking mechanism are hydraulically operated.*
3. *Proper access stairs and platforms help to create a safe working environment.*
4. *The Lokotrack LT120E crusher and conveyors are electrically driven.*

Technical specification		
C120 jaw crusher		
Feed opening	1200 x 870 mm	47 x 34″
Feed hopper		
Standard	6 m³	8 yd³
With extensions	9 m³	12 yd³
Loading height	4.5 m	14′ 9″
Feeder		
Width	1200 mm	47″
Length	4200 mm	13′ 9″
Side conveyor		
Width	650 mm	26″
Length	7 m	22′ 11″
Main conveyor		
Width	1200 mm	47″
Discharge height (standard)	3400 mm	11′ 2″
Discharge height (optional)	4600 mm	15′ 1″

Engine		
Caterpillar C13	310 kW	415 hp
Generator (LT120E)	420 kVA	
Transport dimensions		
Length	16000 mm	52′ 6″
Width	3000 mm	9′ 10″
Height	3900 mm	12′ 10″
Weight (LT120)	57 tons	114000 lbs
Weight (LT120E)	63 tons	126000 lbs
Options		
Long main conveyor, hammer and boom, magnetic separator, automatic lubrication unit, radio remote control, water spraying system, belt protection plate, additional side plates for hopper, rubber lining for feeder and hopper, hydraulic generator (Lokotrack LT120), pre-heater for engine, interlocking cable, hot and cold climate kits.		

The Lokotrack LT120 is easily transportable on a trailer. The unit pictured is equipped with an optional 16 m (52′ 6″) hydraulically foldable main conveyor.



"The Lokotrack LT120 has really exceeded our expectations with its high performance and low running costs."

Jouni Karra
Crushing Manager
Soraset Yhtiöt Oy
Finland




metso

Metso´s Mining and Construction crushing and screening equipment

Product families:

Unit crushers

- C series jaw crushers
- Primary gyratory crushers
- GP series cone crushers
- HP series cone crushers
- MP series cone crushers
- NP series horizontal impact crushers
- Barmac series vertical impact crushers

Unit screens

- DF series screens
- CVB series screens
- FS series screens
- TS series screens
- MF series screens
- RF series screens

Unit feeders

- TK series feeders
- FS series feeders
- B series feeders

Mobile crushing and screening plants

- Lokotrack LT series track-mounted crushing plants
- Lokotrack ST series track-mounted screening plants
- Nordberg NW series wheel-mounted crushing plants

Stationary crushing plants

- Complete plants for aggregate production
- Complete plants for recycling applications

All Metso Minerals Oy Tampere Works equipment is produced in accordance with a quality assurance system that complies with the ISO 9001 standard, as certified by Lloyd's Register Quality Assurance Limited.

metso
Expect results

www.metso.com/miningandconstruction
minerals.info.csr@metso.com

Mining and Construction Technology main contacts

AUSTRALIA AND NEW ZEALAND
Metso Minerals (Australia) Ltd
1110 Hay Street
West Perth, WA 6005
Australia
Phone: +61 8 9420 5555
Fax: +61 8 9320 2500

CHINA
Metso Minerals (Beijing) Ltd
19/F, The Exchange Beijing, Tower 4
No. 118 Jian Guo Lu Yi Chaoyang District
100022 Beijing
China
Phone: +86 10 6566 6600
Fax: +86 10 6566 2583

EUROPE, MIDDLE EAST AND AFRICA
Metso Minerals España, S.A.
C/ Rivas N° 4
28032 Madrid
Spain
Phone: +34 91 825 5700
Fax: +34 91 825 5740

INDIA AND ASIA-PACIFIC
Metso Minerals (India) Pvt Ltd
1st Floor, DLF Building No. 10,
Tower A, DLF Cybercity
DLF Phase II
Gurgaon 122002
India
Phone: +91 124 235 1541
Fax: +91 124 235 1601

NORTH AND CENTRAL AMERICA
Metso Minerals Industries Inc.
20965 Crossroads Circle
Waukesha, WI 53186
U.S.A.
Phone: +1 262 717 2500
Fax: +1 262 717 2504

RUSSIA AND OTHER CIS COUNTRIES
ZAO Metso Minerals (CIS)
V.O. Liniya, 70
199178 St. Petersburg
Russia
Phone: +7 812 740 3040
Fax: +7 812 740 5775

SOUTH AMERICA
Metso Minerals Indústria e Comércio Ltda
Avenida Independência, 2500 - Éden
18087-050 Sorocaba
Brazil
Phone: +55 15 2102 1300
Fax: +55 15 2102 1696

METSO´S MINING AND CONSTRUCTION TECHNOLOGY
Lokomonkatu 3, P.O.Box 306
FI-33101 Tampere
Finland
Phone: +358 20 484 142
Fax: +358 20 484 143

Subject to alteration without prior notice, Brochure No. 2650-08-11-ESBL/Tampere-English,
© 2011 Metso. Printed in Finland